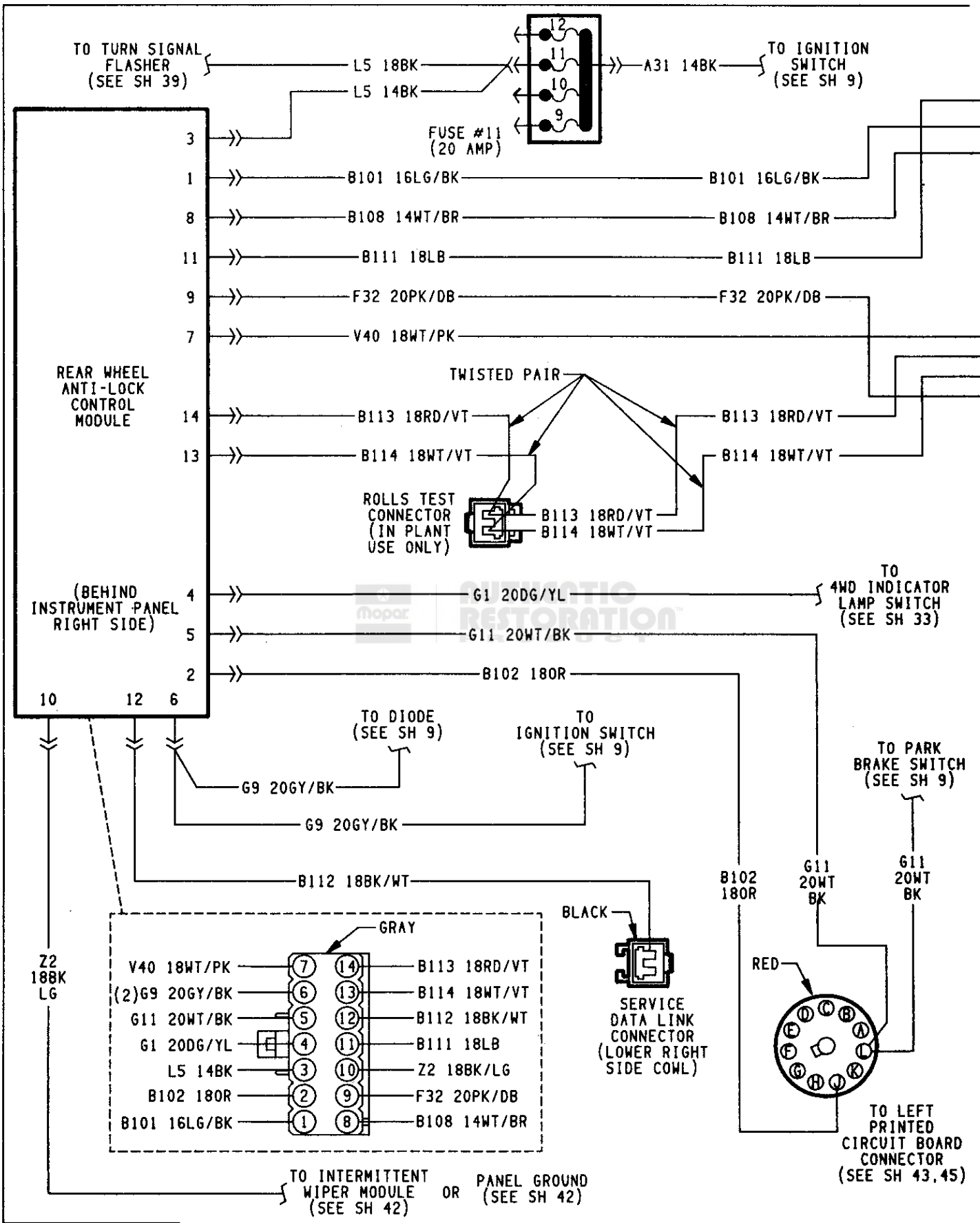

AN 25 REAR WHEEL ANTI-LOCK BRAKE SYSTEM J948W-1

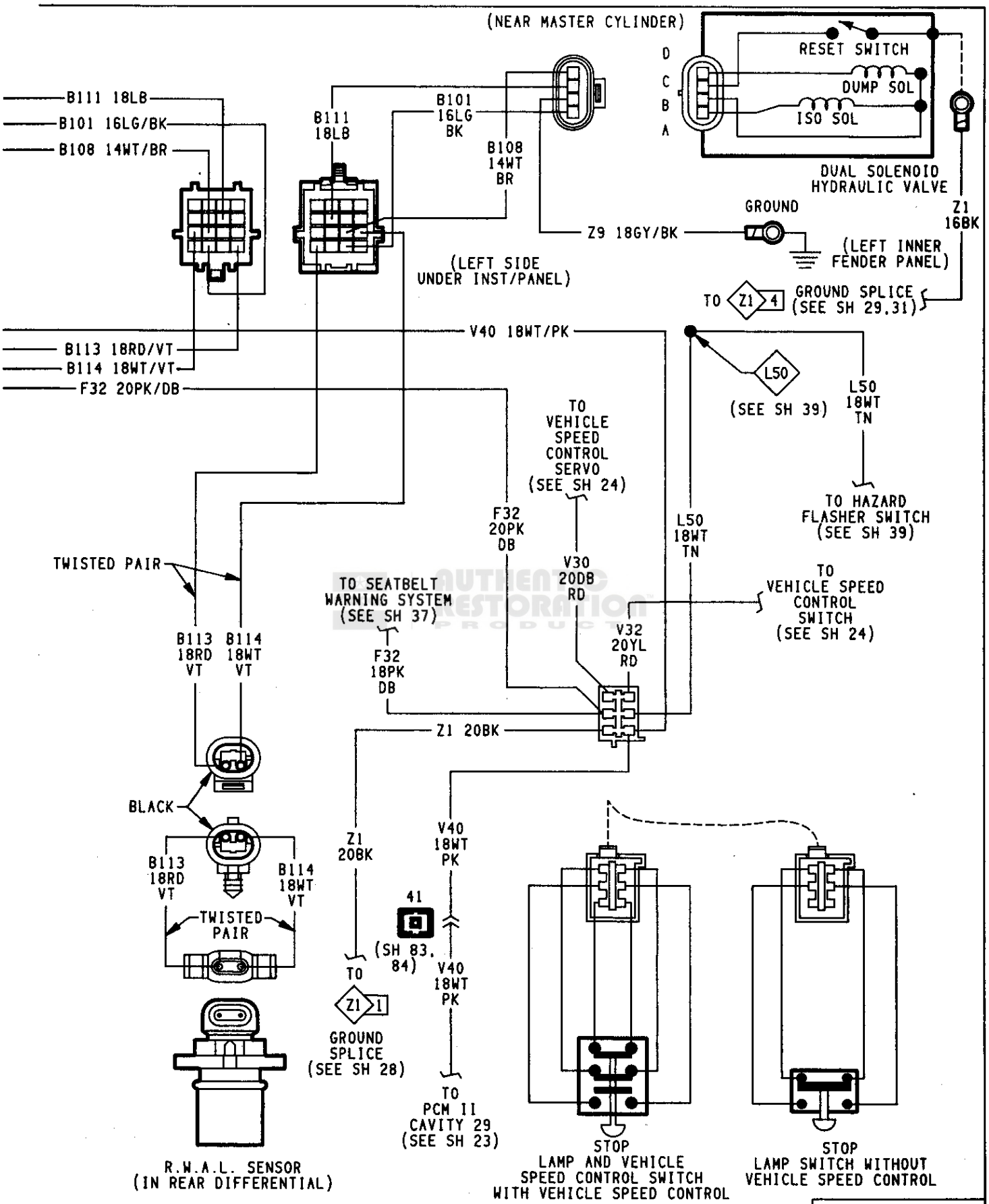

J948W-1 REAR WHEEL ANTI-LOCK BRAKE SYSTEM AN 26