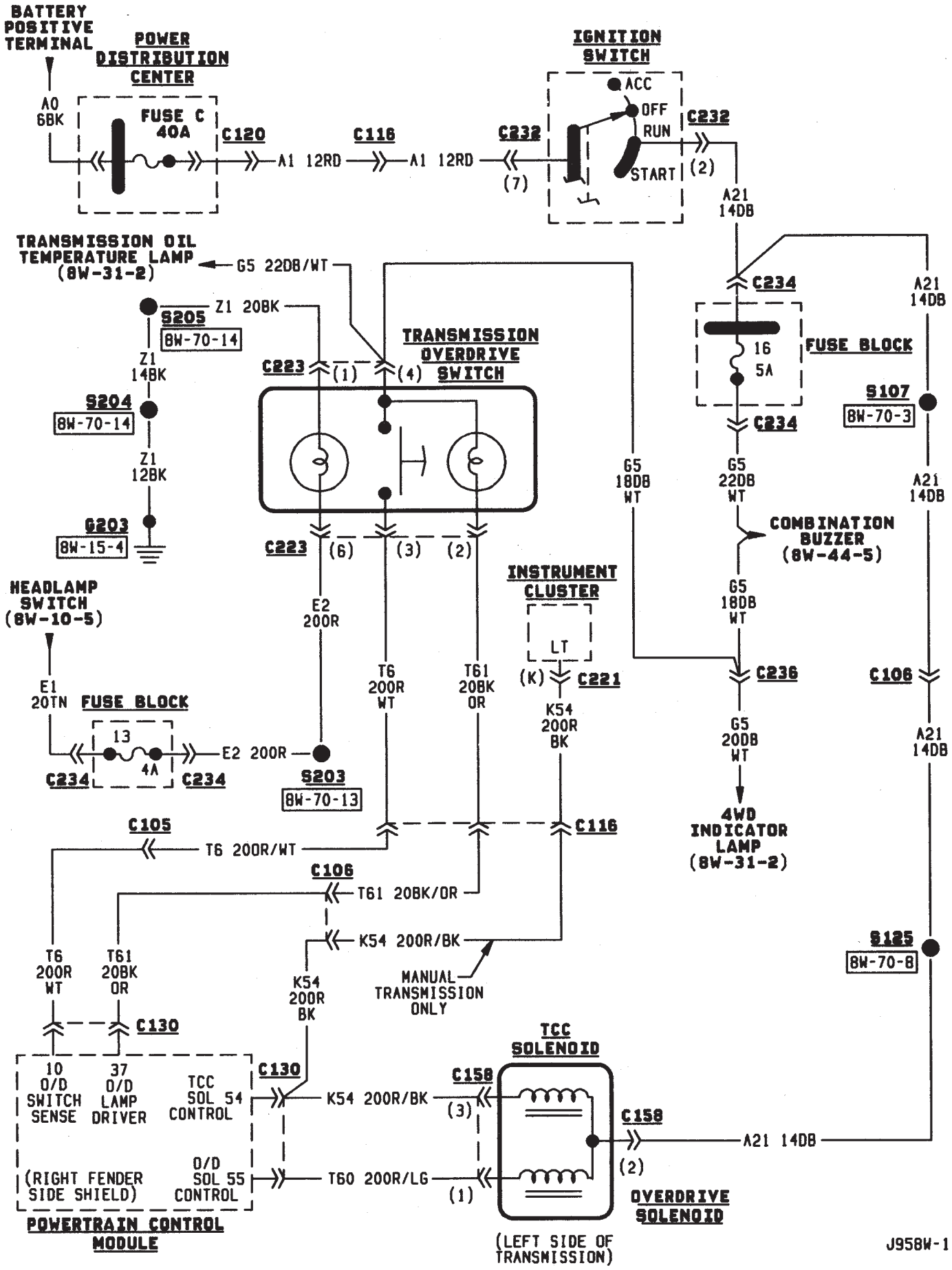
BATTERY POSITIVE TERMINAL
POWER DISTRIBUTION CENTER
A0 6BK
FUSE C 40A
C120
A1 12RD
C116
A1 12RD
C232
(7)
IGNITION SWITCH
ACC
OFF
RUN
START
C232
(2)
A21 14DB
TRANSMISSION OIL TEMPERATURE LAMP (8W-31-2)
G5 22DB/WT
Z1 20BK
S205
8W-70-14
Z1 14BK
S204
8W-70-14
Z1 12BK
G203
8W-15-4
C223
(1)
(4)
TRANSMISSION OVERDRIVE SWITCH
C223
(6)
(3)
(2)
E2 200R
T6 200R WT
T61 20BK OR
G5 18DB WT
C234
A21 14DB
FUSE BLOCK
16 5A
C234
S107
8W-70-3
G5 22DB WT
A21 14DB
COMBINATION BUZZER (8W-44-5)
G5 18DB WT
C236
C106
A21 14DB
G5 20DB WT
4WD INDICATOR LAMP (8W-31-2)
INSTRUMENT CLUSTER
LT
(K)
C221
K54 200R BK
C116
HEADLAMP SWITCH (8W-10-5)
E1 20TN
FUSE BLOCK
13
4A
C234
C234
E2 200R
S203
8W-70-13
C105
T6 200R/WT
C106
T61 20BK/OR
K54 200R/BK
MANUAL TRANSMISSION ONLY
S125
8W-70-8
T6 200R WT
T61 20BK OR
C130
K54 200R BK
TCC SOLENOID
10 O/D SWITCH SENSE
37 O/D LAMP DRIVER
TCC SOL 54 CONTROL
C130
K54 200R/BK
C158
(3)
C158
A21 14DB
(2)
(RIGHT FENDER SIDE SHIELD)
O/D SOL 55 CONTROL
T60 200R/LG
(1)
OVERDRIVE SOLENOID
POWERTRAIN CONTROL MODULE
(LEFT SIDE OF TRANSMISSION)
J958W-1