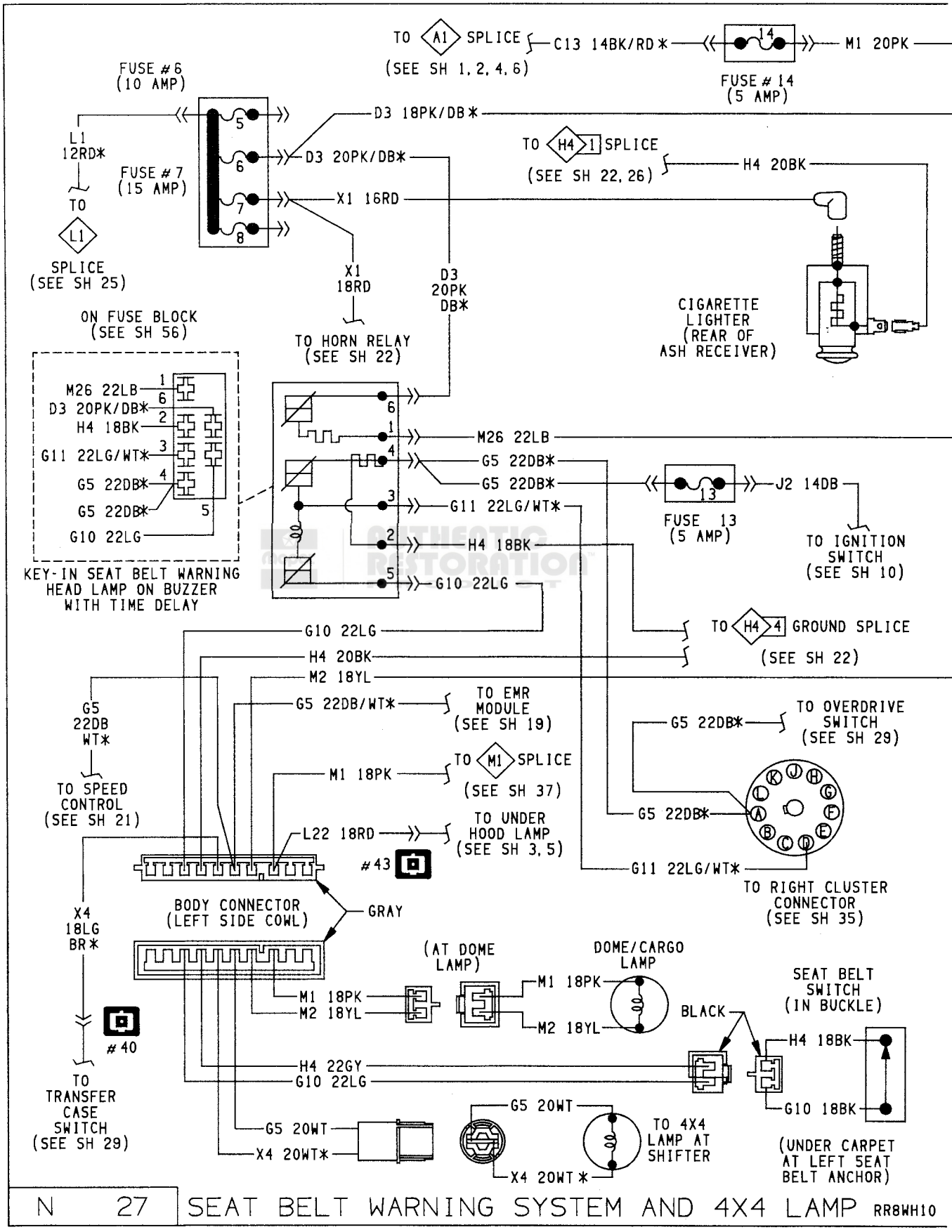

N 27 SEAT BELT WARNING SYSTEM AND 4X4 LAMP RR8WH10

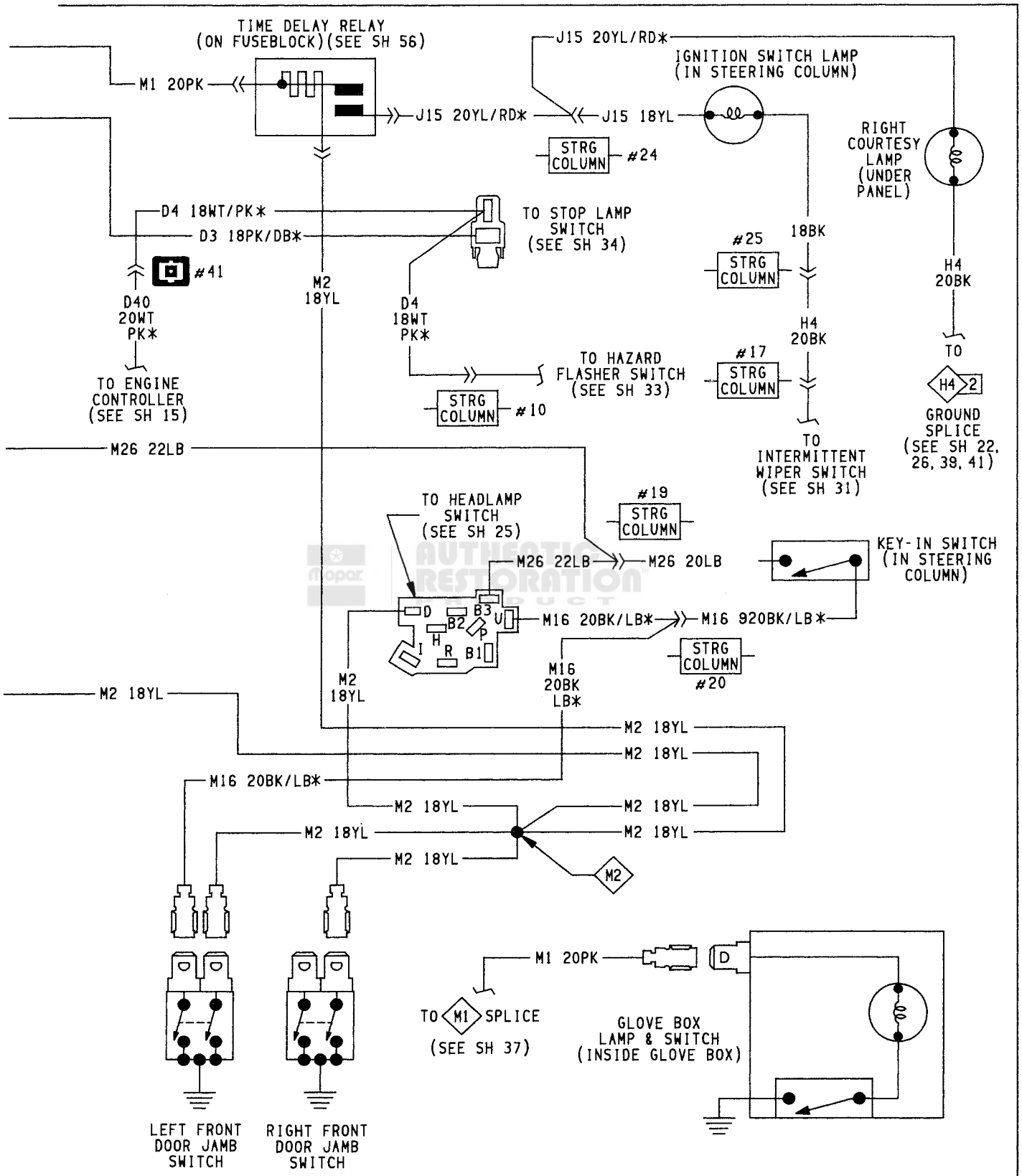
TIME DELAY RELAY
(ON FUSEBLOCK)(SEE SH 56)
M1 20PK
J15 20YL/RD*
J15 20YL/RD*
J15 18YL
IGNITION SWITCH LAMP
(IN STEERING COLUMN)
STRG COLUMN
#24
RIGHT COURTESY LAMP (UNDER PANEL)
D4 18WT/PK*
D3 18PK/DB*
TO STOP LAMP SWITCH (SEE SH 34)
18BK
#25
STRG COLUMN
H4 20BK
#41
D40 20WT PK*
M2 18YL
D4 18WT PK*
H4 20BK
TO
TO HAZARD FLASHER SWITCH (SEE SH 33)
#17
STRG COLUMN
H4 2
GROUND SPLICE (SEE SH 22, 26, 39, 41)
TO ENGINE CONTROLLER (SEE SH 15)
STRG COLUMN
#10
M26 22LB
TO INTERMITTENT WIPER SWITCH (SEE SH 31)
TO HEADLAMP SWITCH (SEE SH 25)
#19
STRG COLUMN
KEY-IN SWITCH (IN STEERING COLUMN)
M26 22LB
M26 20LB
D
B3
U
B2
P
H
I
R
B1
M16 20BK/LB*
M16 920BK/LB*
STRG COLUMN
#20
M2 18YL
M16 20BK LB*
M2 18YL
M2 18YL
M2 18YL
M16 20BK/LB*
M2 18YL
M2 18YL
M2 18YL
M2 18YL
M2 18YL
M2
M1 20PK
D
TO M1 SPLICE
(SEE SH 37)
GLOVE BOX LAMP & SWITCH (INSIDE GLOVE BOX)
LEFT FRONT DOOR JAMB SWITCH
RIGHT FRONT DOOR JAMB SWITCH