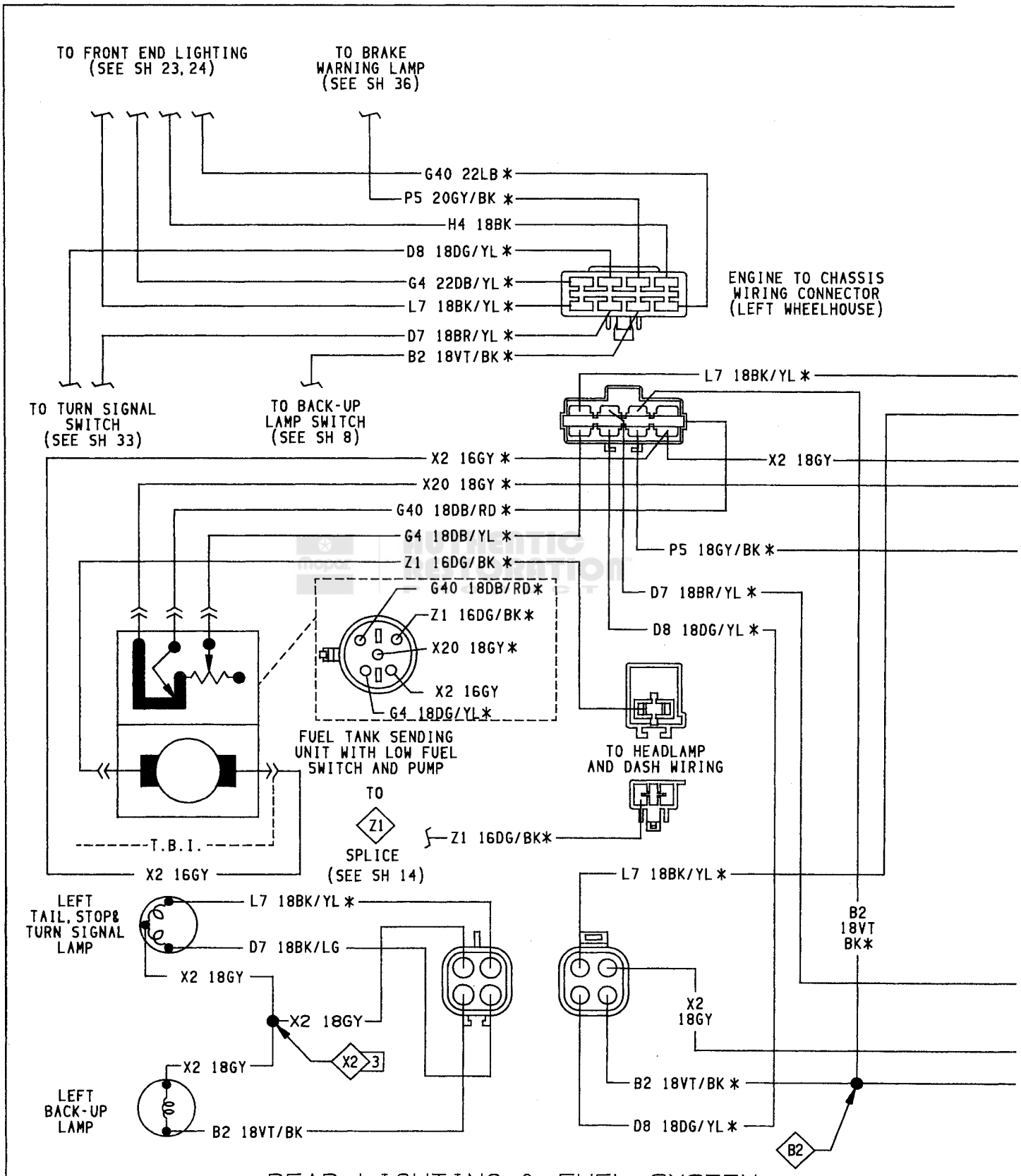

REAR LIGHTING & FUEL SYSTEM
ELECTRONIC INJECTION 3.9L ENGINE

N 53

RR8WH10