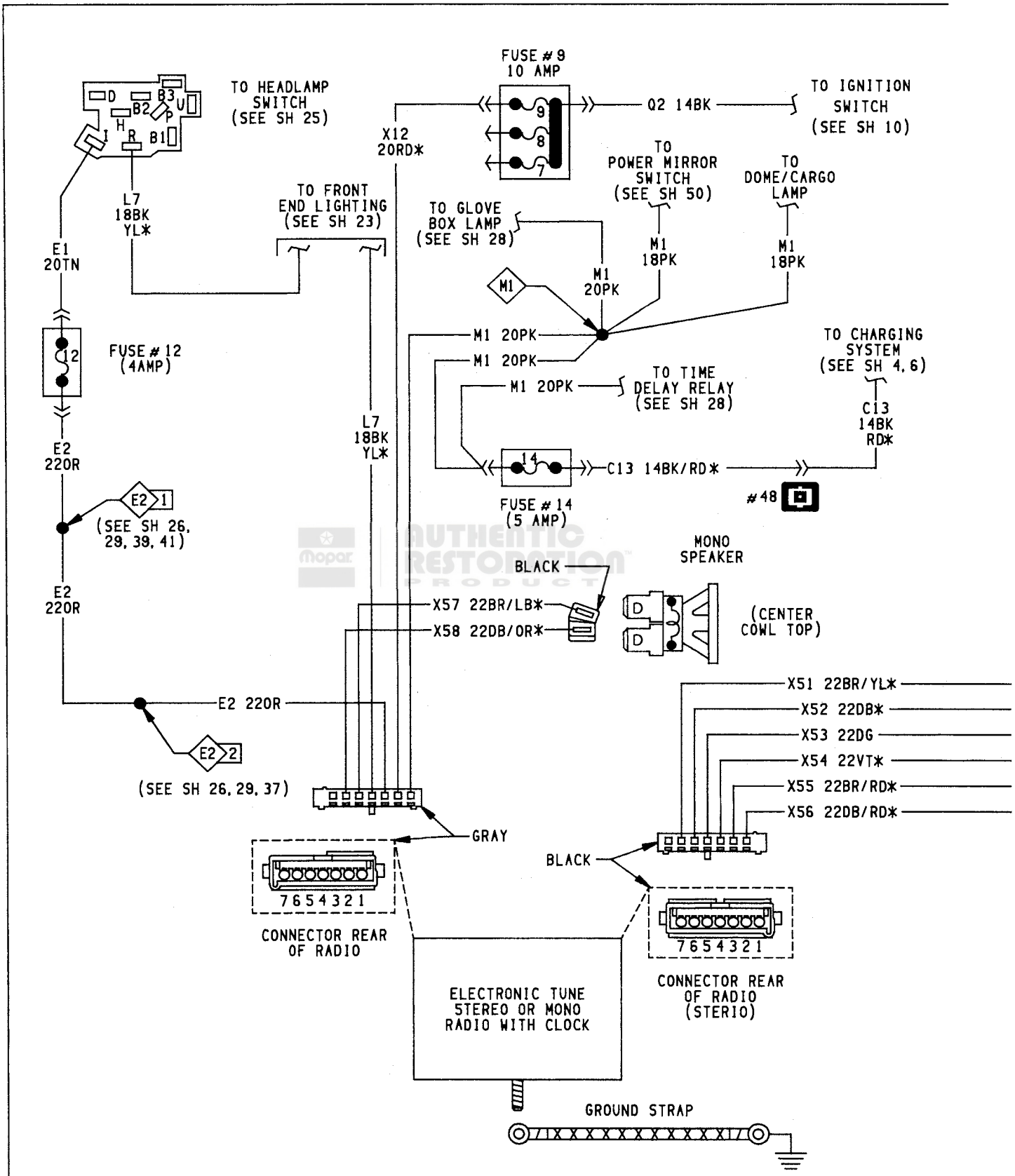

N 37 ELECTRONICALLY TUNED RADIOS RR8WH10

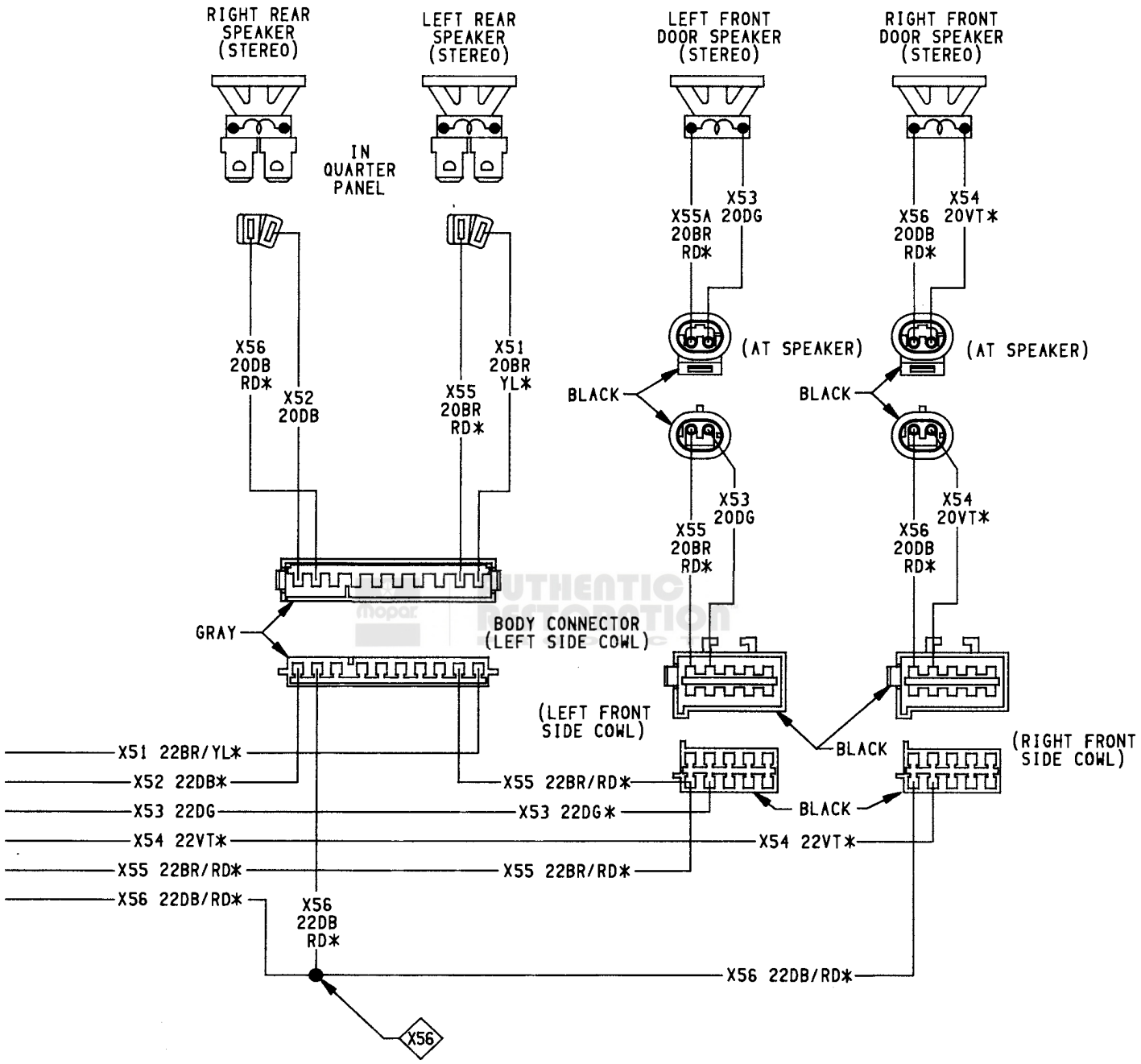
RIGHT REAR SPEAKER (STEREO)
LEFT REAR SPEAKER (STEREO)
LEFT FRONT DOOR SPEAKER (STEREO)
RIGHT FRONT DOOR SPEAKER (STEREO)
IN QUARTER PANEL
X55A 20BR RD*
X53 20DG
X56 20DB RD*
X54 20VT*
X56 20DB RD*
X52 20DB
X55 20BR RD*
X51 20BR YL*
(AT SPEAKER)
(AT SPEAKER)
BLACK
BLACK
X53 20DG
X55 20BR RD*
X54 20VT*
X56 20DB RD*
GRAY
BODY CONNECTOR (LEFT SIDE COWL)
(LEFT FRONT SIDE COWL)
BLACK
(RIGHT FRONT SIDE COWL)
BLACK
X51 22BR/YL*
X52 22DB*
X55 22BR/RD*
X53 22DG
X53 22DG*
X54 22VT*
X54 22VT*
X55 22BR/RD*
X55 22BR/RD*
X56 22DB/RD*
X56 22DB RD*
X56 22DB/RD*
X56