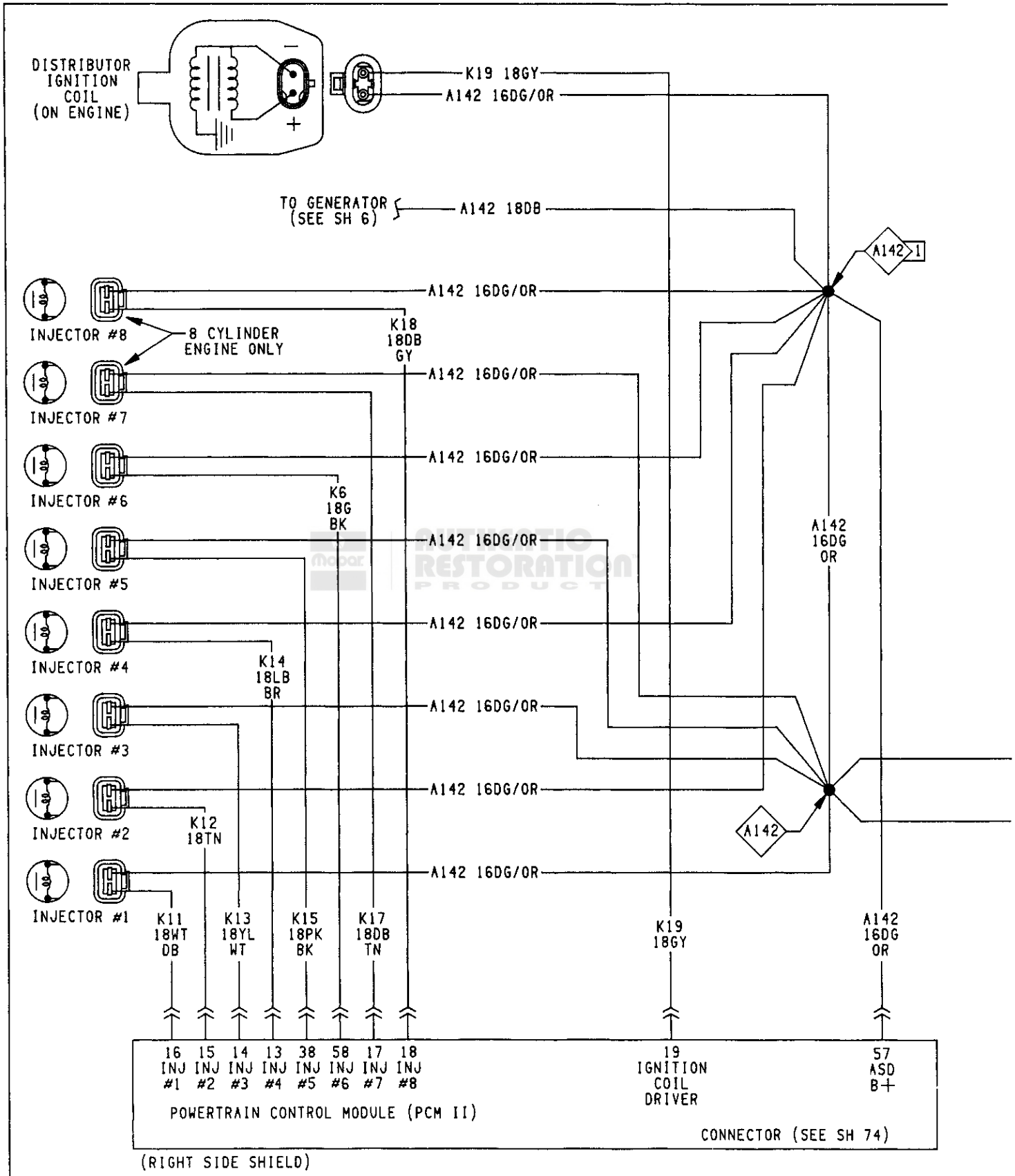

IGNITION SYSTEM
3.9L & 5.2L MFI ENGINES

AN 15

J938W-7

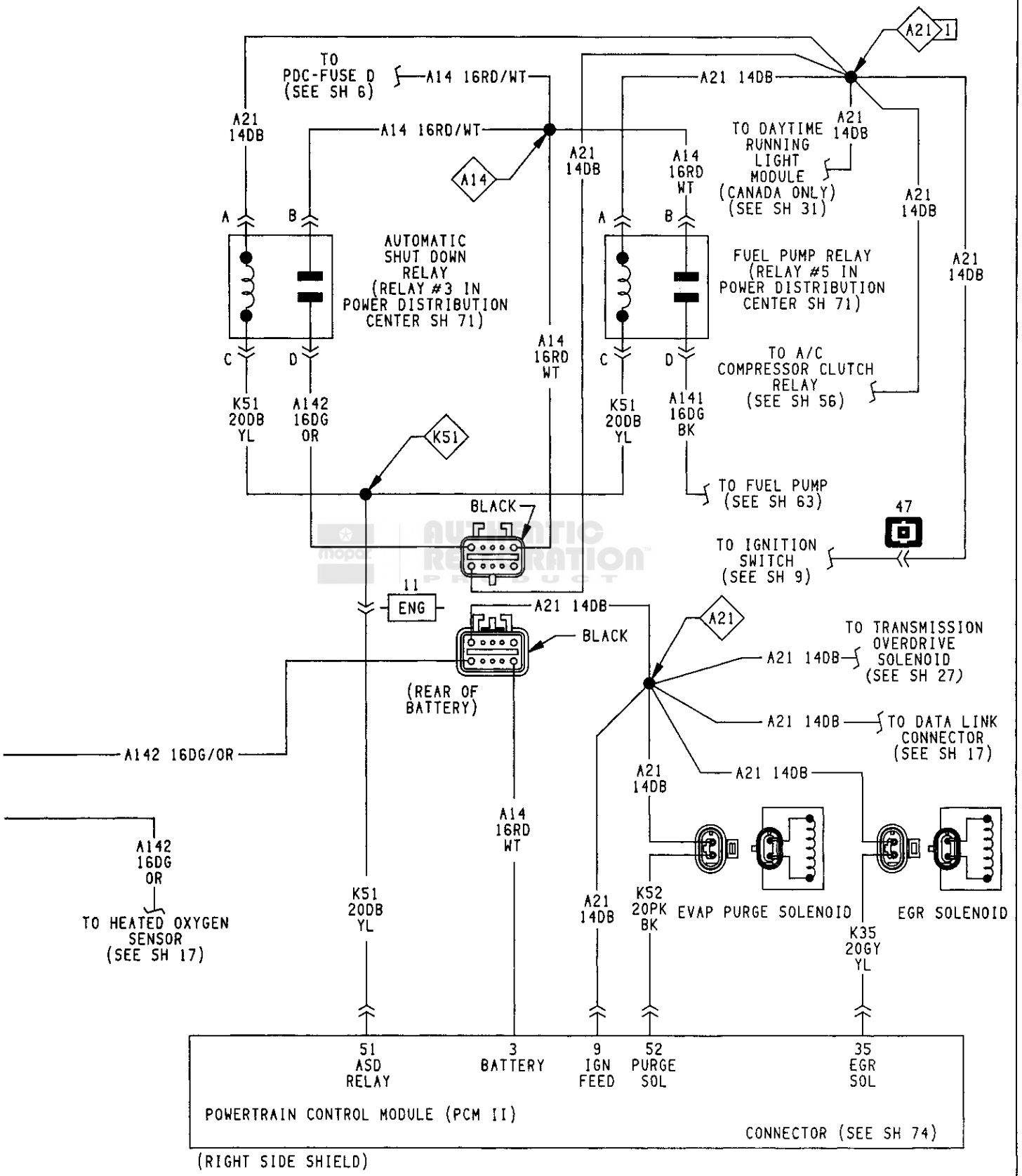

IGNITION SYSTEM
3.9L & 5.2L MFI ENGINES

J938W-7

AN 16