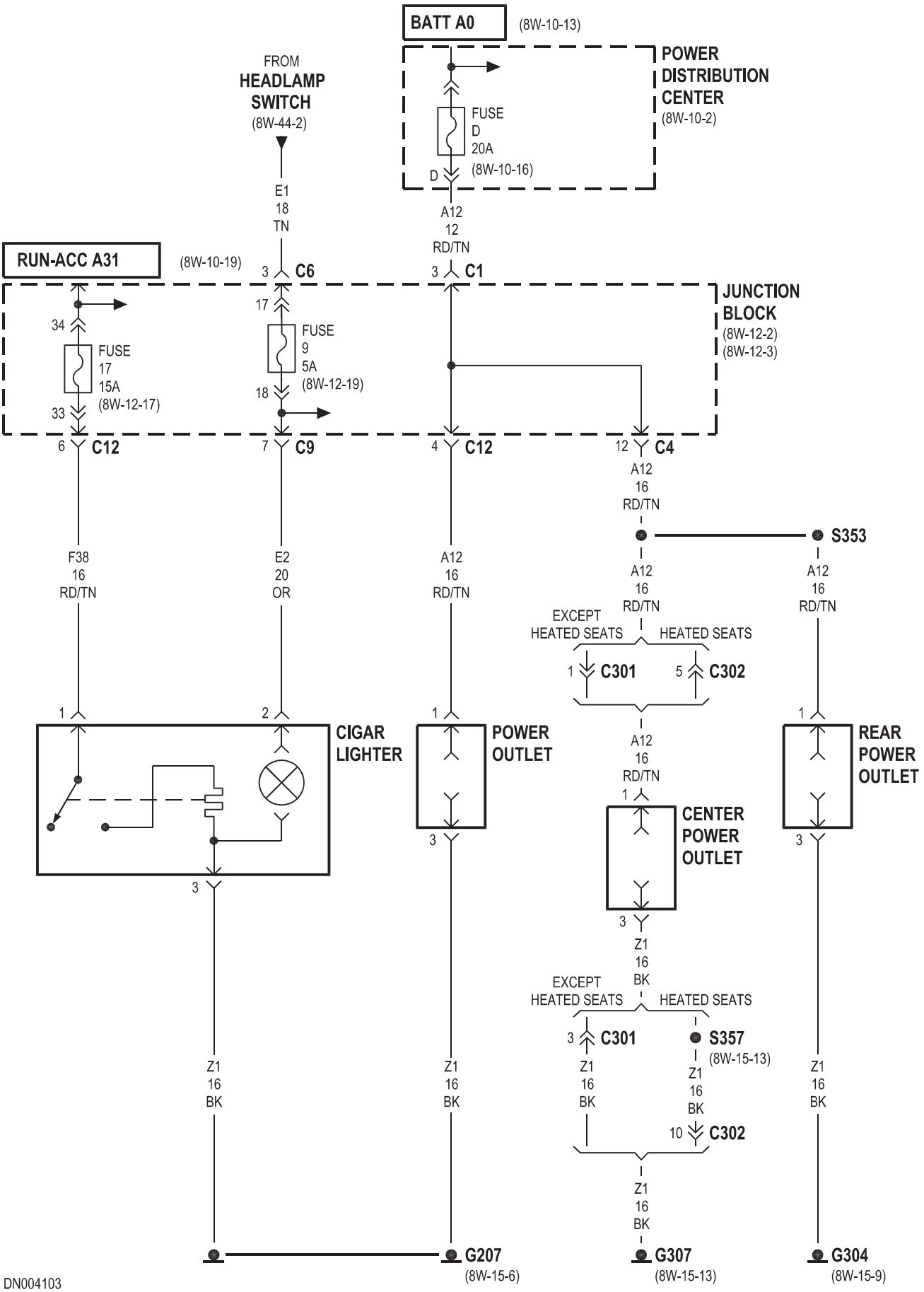
BATT A0
(8W-10-13)
POWER DISTRIBUTION CENTER
(8W-10-2)
FUSE
D
20A
(8W-10-16)
D
A12
12
RD/TN
FROM
HEADLAMP SWITCH
(8W-44-2)
E1
18
TN
RUN-ACC A31
(8W-10-19)
3
C6
3
C1
JUNCTION BLOCK
(8W-12-2)
(8W-12-3)
34
FUSE
17
15A
(8W-12-17)
33
17
FUSE
9
5A
(8W-12-19)
18
6
C12
7
C9
4
C12
12
C4
A12
16
RD/TN
S353
F38
16
RD/TN
E2
20
OR
A12
16
RD/TN
A12
16
RD/TN
A12
16
RD/TN
EXCEPT HEATED SEATS
HEATED SEATS
1
C301
5
C302
1
2
CIGAR LIGHTER
1
POWER OUTLET
1
REAR POWER OUTLET
A12
16
RD/TN
1
CENTER POWER OUTLET
3
3
3
Z1
16
BK
EXCEPT HEATED SEATS
HEATED SEATS
3
C301
S357
(8W-15-13)
Z1
16
BK
Z1
16
BK
Z1
16
BK
10
C302
Z1
16
BK
Z1
16
BK
Z1
16
BK
G207
(8W-15-6)
G307
(8W-15-13)
G304
(8W-15-9)