2001 Dodge or Ram Truck RAM 1500 Truck 4WD V8-5.9L VIN Z LDC

Vehicle > Heating and Air Conditioning > Diagrams > Electrical - Interactive Color (Non OE)
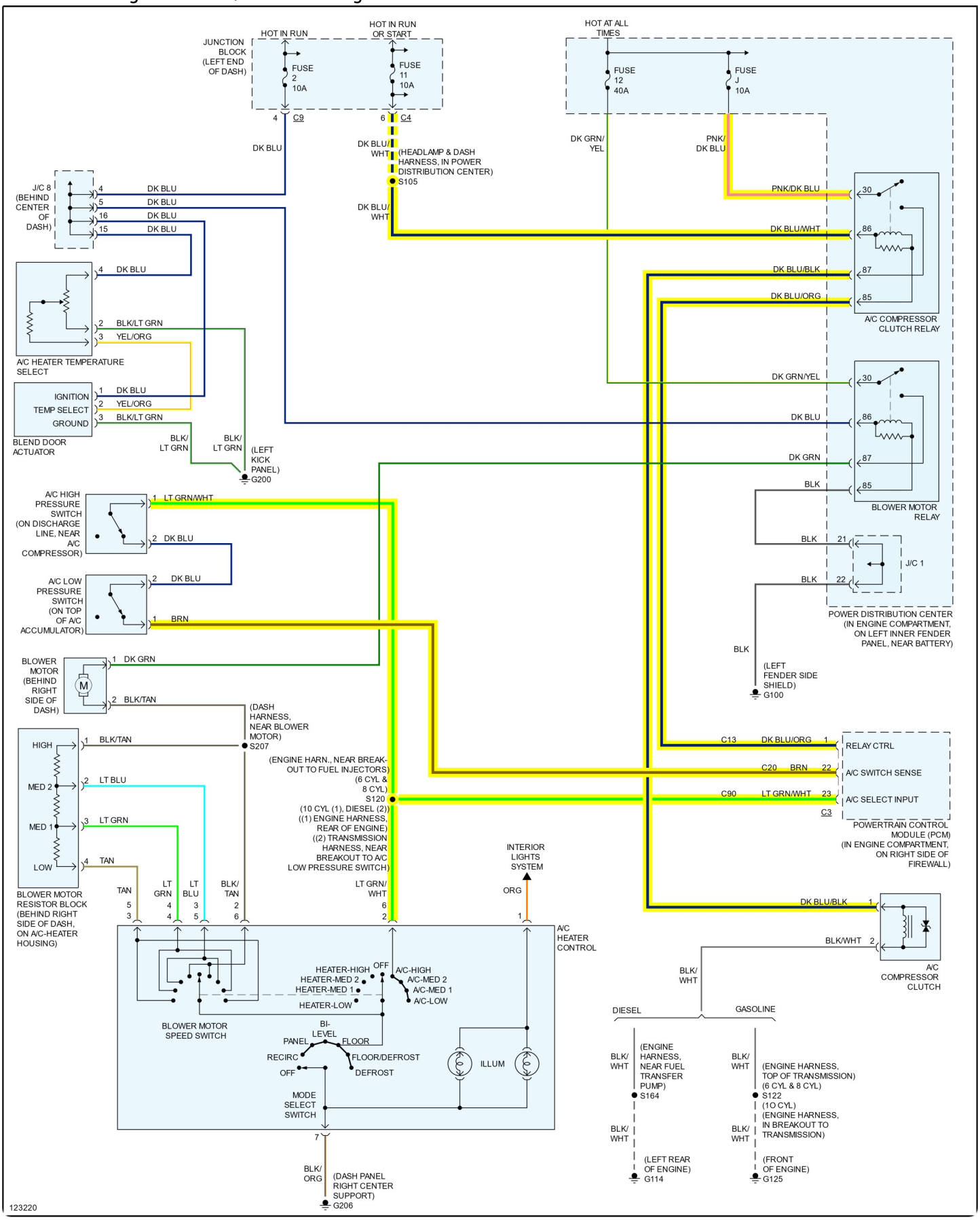
Air Conditioning - Manual A/C Circuit - Page 1 of 1